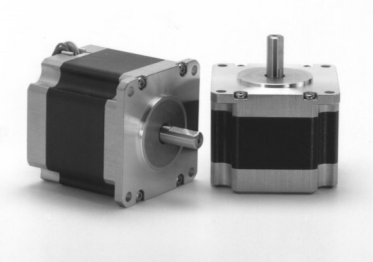

SECM264M... Serie

2-Phasen-Schrittmotor
[0,9° High-Torque-Version]

Model A = Single Shaft B = Double Shaft	● Bipolar Parallel				● Bipolar Serial				● Unipolar				Torque Speed-curve
	Holding Torque [Nm]	Current/ Phase [A]	Resistance/ Phase [Ohm]	Inductance/ Phase [mH]	Holding Torque [Nm]	Current/ Phase [A]	Resistance/ Phase [Ohm]	Inductance/ Phase [mH]	Holding Torque [Nm]	Current/ Phase [A]	Resistance/ Phase [Ohm]	Inductance/ Phase [mH]	
SECM264M-E1.0 (A/B)	0.55	1.4	2.8	8.4	0.55	0.7	11.2	33.6	0.44	1.0	5.6	8.4	N1
SECM264M-E2.0 (A/B)	0.55	2.8	0.7	2.2	0.55	1.4	2.8	8.8	0.44	2.0	1.4	2.2	N2
SECM264M-E3.0 (A/B)	0.55	4.2	0.3*	0.9	0.55	2.1	1.2*	3.6	0.44	3.0	0.6*	0.9	N3

Number of Leads	Weight of Motor	Size Lenght	Rotor Inertia
8	0.45 kg	56.4 x 56.4 x 39 mm	145 x 10^{-7} kgm²

Resistance / Phase (Ω) = ± 10%, (* ± 15%), Inductance / Phase (mH) = ± 20%

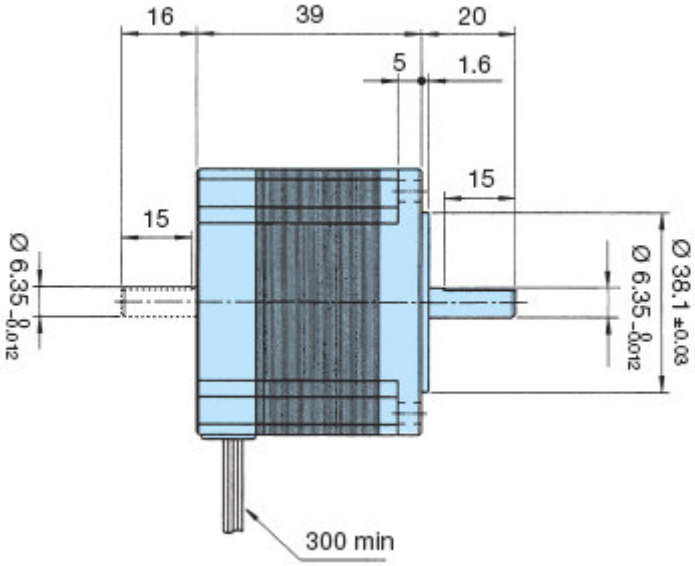

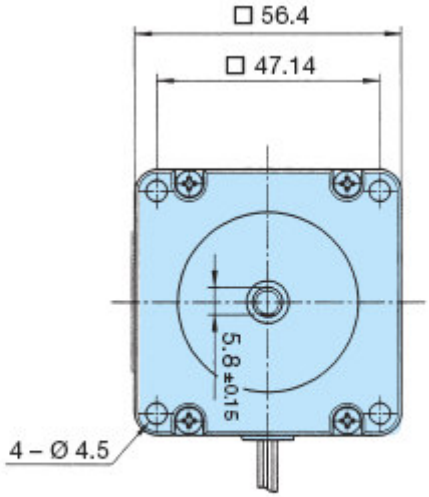

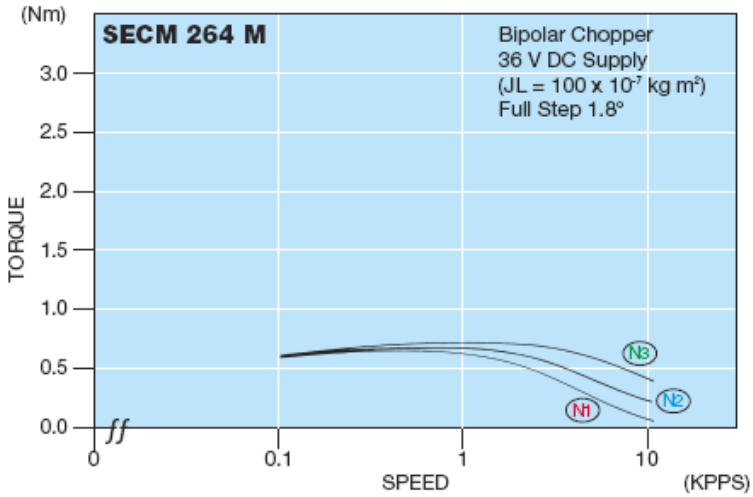

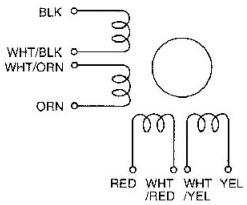

Planetengetriebe sind optional erhältlich

EC Motion GmbH - Glockensprung (neu) 8 - D-41812 Erkelenz
Tel.: +49-2431-94206-0 - E-Mail: info@ec-motion.de
Internet: www.ec-motion.de

REACH COMPLIANT RoHS

Version 01/23