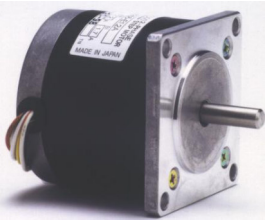

ECM264/6... Serie

2-Phasen-Schrittmotor
[1,8° Standard-Torque-Version]

Auslaufmodell

Model A = Single Shaft B = Double Shaft	● Bipolar Parallel				● Bipolar Serial				● Unipolar				Torque Speed-curve
	Holding Torque [Nm]	Current/ Phase [A]	Resistance/ Phase [Ohm]	Inductance/ Phase [mH]	Holding Torque [Nm]	Current/ Phase [A]	Resistance/ Phase [Ohm]	Inductance/ Phase [mH]	Holding Torque [Nm]	Current/ Phase [A]	Resistance/ Phase [Ohm]	Inductance/ Phase [mH]	
ECM264-E1.5 (A/B)	0.40	2.1	0.75	1.8	0.40	1.05	3.0	7.2	0.29	1.5	1.5	1.8	Q1
ECM265-E1.0 (A/B)	0.70	1.4	2.5	9.0	0.70	0.7	10.0	36.0	0.50	1.0	5.0	9.0	Q2
ECM265-E2.6 (A/B)	0.60	3.7	0.36	0.9	0.60	1.85	1.44	3.6	0.45	2.6	0.72	0.9	Q3
ECM266-E1.2 (A/B)	0.80	1.7	2.5	9.0	0.80	0.85	10.0	36.0	0.60	1.2	5.0	9.0	Q4

Number of Leads	Weight of Motor	Size Lenght	Rotor Inertia
8	0.4 kg	ECM264... 56.4 x 56.4 x 38 mm	57 x 10^{-7} kgm²
8	0.55 kg	ECM265... 56.4 x 56.4 x 51 mm	100 x 10^{-7} kgm²
8	0.6 kg	ECM266... 56.4 x 56.4 x 51 mm	100 x 10^{-7} kgm²

Resistance / Phase (Ω) = ± 10%, Inductance / Phase (mH) = ± 20%

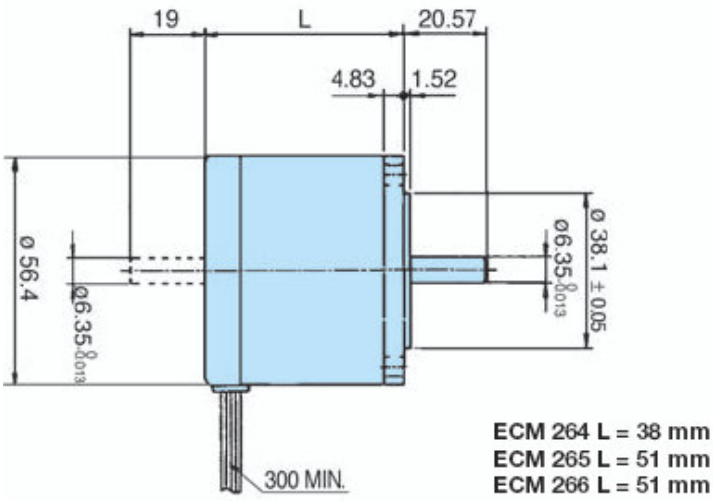

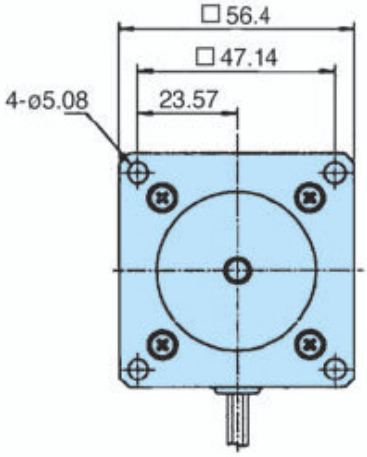

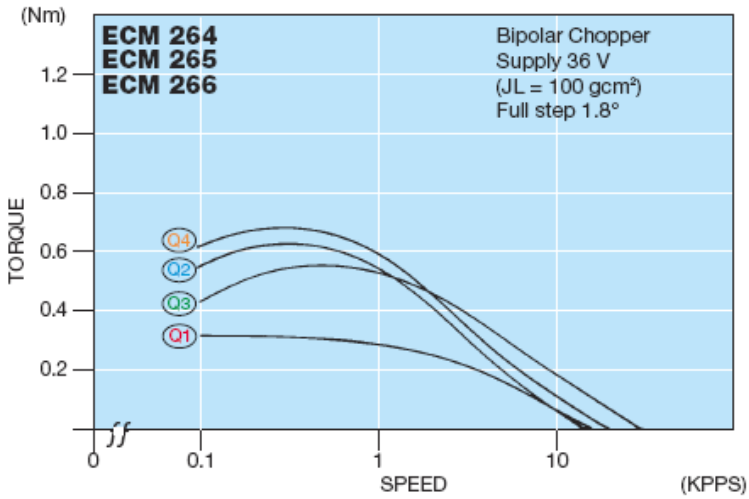

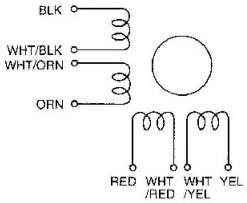

Planetengetriebe sind optional erhältlich

EC Motion GmbH - Glockensprung (neu) 8 - D-41812 Erkelenz
Tel.: +49-2431-94206-0 - E-Mail: info@ec-motion.de
Internet: www.ec-motion.de

Version 01/23